REV.	ECO NO.	DATE	SIGN	DESCRIPTION
A		1/8'08		RELEASED
B		9/4'08		

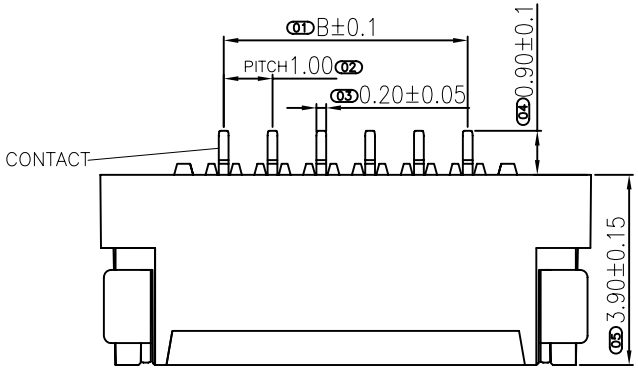

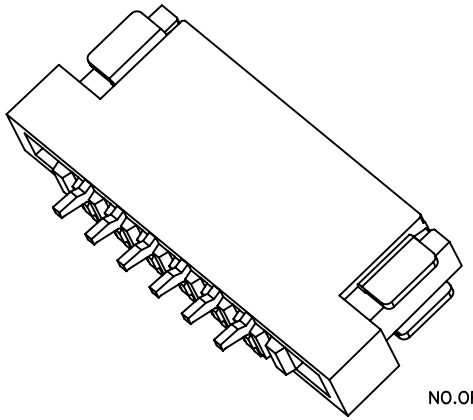

NOTE:
1.MATERIAL
HOUSING:NYLON 46 UL 94V-0
HTN UL 94V-0
CONTACTS:BRASS
SOLDER PAD:BRASS
2.PLATING:
CONTACTS:TIN OVER NICKEL
3.PART NO:
EWBL123 -XXR- TAND
SERIES
NO.OF CONTACTS
RIGHT ANGLE(DOUBLE-FACE CONTACT)
ND-TIN OVER NICKEL(LEAD FREE)
PACKAGING
TA-EMBOSSED TAPE
TU-TUBE
4.PART NO:
OPERATING VOLTAGE:50V AC,DC
CURRENT RATING:0.4A AC,DC
OPERATING TEMPERATURE:-55C~+85C

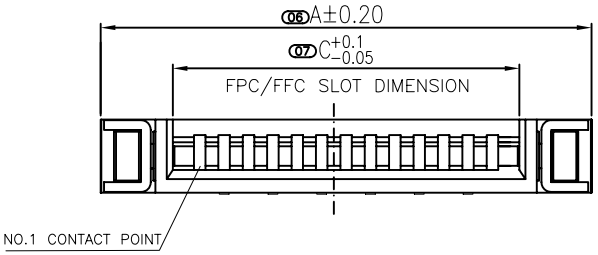

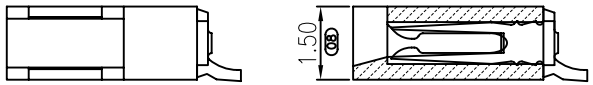

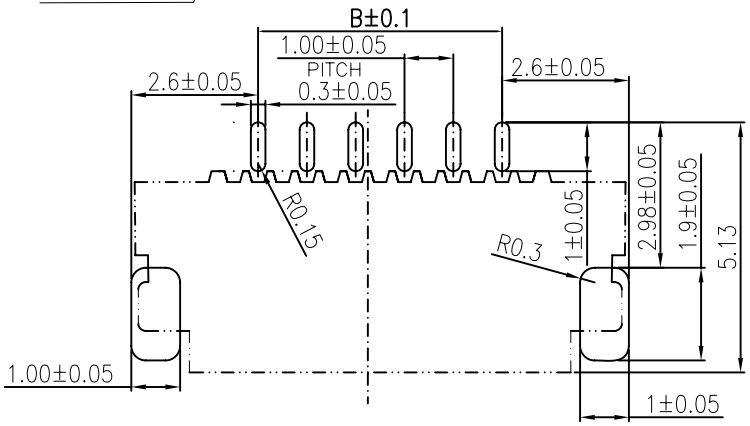

RECOMMENDED P.C.B LAYOUT

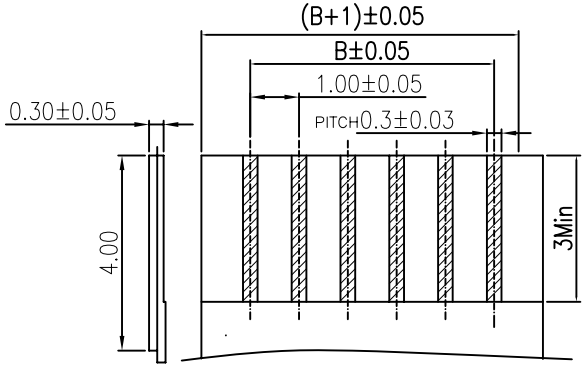

APPLICABLE FPC

PART NO.	DIMENSION A	B	C
BL123-04R-XXND	8.03	3.00	5.07
BL123-05R-XXND	9.03	4.00	6.07
BL123-06R-XXND	10.03	5.00	7.07
BL123-07R-XXND	11.03	6.00	8.07
BL123-08R-XXND	12.03	7.00	9.07
BL123-09R-XXND	13.03	8.00	10.07
BL123-10R-XXND	14.03	9.00	11.07
BL123-11R-XXND	15.03	10.00	12.07
BL123-12R-XXND	16.03	11.00	13.07
BL123-13R-XXND	17.03	12.00	14.07
BL123-14R-XXND	18.03	13.00	15.07
BL123-15R-XXND	19.03	14.00	16.07
BL123-16R-XXND	20.03	15.00	17.07
BL123-17R-XXND	21.03	16.00	18.07
BL123-18R-XXND	22.03	17.00	19.07
BL123-19R-XXND	23.03	18.00	20.07
BL123-20R-XXND	24.03	19.00	21.07
BL123-21R-XXND	25.03	20.00	22.07
BL123-22R-XXND	26.03	21.00	23.07
BL123-23R-XXND	27.03	22.00	24.07
BL123-24R-XXND	28.03	23.00	25.07
BL123-25R-XXND	29.03	24.00	26.07
BL123-26R-XXND	30.03	25.00	27.07
BL123-27R-XXND	31.03	26.00	28.07
BL123-28R-XXND	32.03	27.00	29.07
BL123-29R-XXND	33.03	28.00	30.07
BL123-30R-XXND	34.03	29.00	31.07

深圳亿沃鑫科有限公司
TEL:+86135-901-78542
FAX:+86-755-32932856
www.ewconn.com

TOLERANCE UNLESS SPECIFIED	
LINEAR	ANGLE
.X ±0.30	X° XX
.XX ±0.20	.X° XX
.XXX ±0.10	.XX° XX

DATE 07,07,06	DAR. BY C L H	MATERIAL
SCALE 1/1	CHK. BY H D J	FINISH
UNIT mm	APP. BY H D J	PART NO.

EWCONNECTOR 深圳亿沃鑫科技有限公司

TITLE: FPC1.0 H1.5 NON-ZIF Dual Contact R/A Connector REV. A

DWG NO. EWBL123

本部品不含有环境管理物质规定之有害物质 [MANAGEMENT REGULATIONS FOR THE RESTRICTIVELY-USED SUBSTANCES INCLUDED IN PARTS AND DEVICES]